Deutsches Institut für Bautechnik

Anstalt des öffentlichen Rechts

Kolonnenstr. 30 L
10829 Berlin
Germany

Tel.: +49(0)30 787 30 0
Fax: +49(0)30 787 30 320
E-mail: dibt@dibt.de
Internet: www.dibt.de

Authorised and notified according to Article 10 of the Council Directive of 21 December 1988 on the approximation of laws, regulations and administrative provisions of Member States relating to construction products (89/106/EEC)

DIBt

Mitglied der EOTA
Member of EOTA

European Technical Approval ETA-99/0010

English translation prepared by DIBt - Original version in German language

Handelsbezeichnung *Trade name*	MKT Bolzenanker BZ plus A4 oder HCR *MKT Wedge anchor BZ plus A4 or HCR*
Zulassungsinhaber *Holder of approval*	MKT Metall-Kunststoff-Technik GmbH & Co. KG Auf dem Immel 2 67685 Weilerbach
Zulassungsgegenstand und Verwendungszweck *Generic type and use of construction product*	Kraftkontrolliert spreizender Dübel aus nichtrostendem Stahl in den Größen M8, M10, M12, M16 und M20 zur Verankerung im Beton *Torque controlled expansion anchor made of stainless steel of sizes M8, M10, M12, M16 and M20 for use in concrete*
Geltungsdauer: vom *Validity: from*	30 January 2009
bis *to*	30 January 2014
Herstellwerk *Manufacturing plant*	MKT Metall-Kunststoff-Technik GmbH & Co. KG Auf dem Immel 2 67685 Weilerbach

Diese Zulassung umfasst *This Approval contains*	15 Seiten einschließlich 7 Anhänge *15 pages including 7 annexes*
Diese Zulassung ersetzt *This Approval replaces*	ETA-99/0010 mit Geltungsdauer vom 14.11.2006 bis 20.07.2009 *ETA-99/0010 with validity from 14.11.2006 to 20.07.2009*

I LEGAL BASES AND GENERAL CONDITIONS

1 This European technical approval is issued by Deutsches Institut für Bautechnik in accordance with:

- Council Directive 89/106/EEC of 21 December 1988 on the approximation of laws, regulations and administrative provisions of Member States relating to construction products[1], modified by Council Directive 93/68/EEC[2] and Regulation (EC) N° 1882/2003 of the European Parliament and of the Council[3];
- Gesetz über das In-Verkehr-Bringen von und den freien Warenverkehr mit Bauprodukten zur Umsetzung der Richtlinie 89/106/EWG des Rates vom 21. Dezember 1988 zur Angleichung der Rechts- und Verwaltungsvorschriften der Mitgliedstaaten über Bauprodukte und anderer Rechtsakte der Europäischen Gemeinschaften (Bauprodukten-gesetz - BauPG) vom 28. April 1998[4], as amended by law of 31 October 2006[5];
- Common Procedural Rules for Requesting, Preparing and the Granting of European technical approvals set out in the Annex to Commission Decision 94/23/EC[6];
- Guideline for European technical approval of "Metal anchors for use in concrete - Part 2: Torque controlled expansion anchors ", ETAG 001-02.

2 Deutsches Institut für Bautechnik is authorized to check whether the provisions of this European technical approval are met. Checking may take place in the manufacturing plant. Nevertheless, the responsibility for the conformity of the products to the European technical approval and for their fitness for the intended use remains with the holder of the European technical approval.

3 This European technical approval is not to be transferred to manufacturers or agents of manufacturers other than those indicated on page 1, or manufacturing plants other than those indicated on page 1 of this European technical approval.

4 This European technical approval may be withdrawn by Deutsches Institut für Bautechnik, in particular pursuant to information by the Commission according to Article 5(1) of Council Directive 89/106/EEC.

5 Reproduction of this European technical approval including transmission by electronic means shall be in full. However, partial reproduction can be made with the written consent of Deutsches Institut für Bautechnik. In this case partial reproduction has to be designated as such. Texts and drawings of advertising brochures shall not contradict or misuse the European technical approval.

6 The European technical approval is issued by the approval body in its official language. This version corresponds fully to the version circulated within EOTA. Translations into other languages have to be designated as such.

---

1 Official Journal of the European Communities L 40, 11 February 1989, p. 12
2 Official Journal of the European Communities L 220, 30 August 1993, p. 1
3 Official Journal of the European Union L 284, 31 October 2003, p. 25
4 Bundesgesetzblatt Teil I 1998, p. 812
5 Bundesgesetzblatt Teil I 2006, p.2407, 2416
6 Official Journal of the European Communities L 17, 20 January 1994, p. 34

II SPECIFIC CONDITIONS OF THE EUROPEAN TECHNICAL APPROVAL

1 Definition of product and intended use

1.1 Definition of the product

The MKT Wedge anchor BZ plus A4 or HCR of sizes M8, M10, M12, M16 and M20 is an anchor made of stainless steel or high corrosions resistant steel which is placed into a drilled hole and anchored by torque-controlled expansion.

An illustration of the product and intended use is given in Annex 1.

1.2 Intended use

The anchor is intended to be used for anchorages for which requirements for mechanical resistance and stability and safety in use in the sense of the Essential Requirements 1 and 4 of Council Directive 89/106 EEC shall be fulfilled and failure of anchorages made with these products would cause risk to human life and/or lead to considerable economic consequences.

The anchor may be used for anchorages with requirements related to resistance to fire.

The anchor is to be used only for anchorages subject to static or quasi-static loading in reinforced or unreinforced normal weight concrete of strength classes C20/25 at least and C50/60 at most according to EN 206:2000-12. It may be anchored in cracked and non-cracked concrete.

<u>MKT Wedge anchor BZ plus A4</u>

The MKT Wedge anchor BZ plus A4 may be used in structures subject to dry internal conditions and also in structures subject to external atmospheric exposure (including industrial and marine environment), or exposure in permanently damp internal conditions, if no particular aggressive conditions exist. Such particular aggressive conditions are e.g. permanent, alternating immersion in seawater or the splash zone of seawater, chloride atmosphere of indoor swimming pools or atmosphere with extreme chemical pollution (e. g. in desulphurization plants or road tunnels where de-icing materials are used).

<u>MKT Wedge anchor BZ plus HCR</u>

The MKT Wedge anchor BZ plus HCR may be used in structures subject to dry internal conditions and also in structures subject to external atmospheric exposure, in permanently damp internal conditions or in other particular aggressive conditions. Such particular aggressive conditions are e.g. permanent, alternating immersion in seawater or the splash zone of seawater, chloride atmosphere of indoor swimming pools or atmosphere with chemical pollution (e.g. in desulphurization plants or road tunnels where de-icing materials are used).

The provisions made in this European technical approval are based on an assumed working life of the anchor of 50 years. The indications given on the working life cannot be interpreted as a guarantee given by the producer, but are to be regarded only as a means for choosing the right products in relation to the expected economically reasonable working life of the works.

2 Characteristics of the product and methods of verification

2.1 Characteristics of the product

The anchor corresponds to the drawings and provisions given in Annexes 2 and 3. The characteristic material values, dimensions and tolerances of the anchor not given in Annexes 2 and 3 shall correspond to the respective values laid down in the technical documentation[7] of this European technical approval.

Regarding the requirements concerning safety in case of fire it is assumed that the anchor meets the requirements of class A1 in relation to reaction to fire in accordance with the stipulations of the Commission decision 96/603/EC, amended by 2000/605/EC.

The characteristic values for the design of anchorages are given in Annexes 4 and 5.

The characteristic values for the design of anchorages regarding resistance to fire are given in Annexes 6 and 7. They are valid for use in a system that is required to provide a specific fire resistance class.

Each anchor is marked with the identifying mark of the producer, the commercial name, the thread size and the maximum thickness of fixture. In addition the MKT Wedge anchor BZ plus A4 is marked with the letters "A4" according to Annex 2. In addition the MKT Wedge anchor BZ plus HCR is marked with the letters "HCR" according to Annex 2.

The anchor shall only be packaged and supplied as a complete unit.

2.2 Methods of verification

The assessment of fitness of the anchor for the intended use in relation to the requirements for mechanical resistance and stability and safety in use in the sense of the Essential Requirements 1 and 4 has been made in accordance with the "Guideline for European technical approval of Metal Anchors for Use in Concrete", Part 1 "Anchors in general" and Part 2 "Torque-controlled expansion anchors", on the basis of Option 1.

The assessment of the anchor for the intended use in relation to the requirements for resistance to fire has been made in accordance with the technical Report TR 020 "Evaluation of anchorages in concrete concerning resistance to fire".

In addition to the specific clauses relating to dangerous substances contained in this European technical approval, there may be other requirements applicable to the products falling within its scope (e.g. transposed European legislation and national laws, regulations and administrative provisions). In order to meet the provisions of the Construction Products Directive, these requirements need also to be complied with, when and where they apply.

3 Evaluation and attestation of conformity and CE marking

3.1 System of attestation of conformity

According to the decision 96/582/EG of the European Commission[8] the system 2(i) (referred to as system 1) of attestation of conformity applies.

---

7 The technical documentation of this European Technical approval is deposited at the Deutsches Institut für Bautechnik and, as far as relevant for the tasks of the approved bodies involved in the attestation of conformity procedure, is handed over to the approved bodies.

8 Official Journal of the European Communities L 254 of 08.10.1996.

System 1: Certification of the conformity of the product by an approved certification body on the basis of:

(a) Tasks for the manufacturer:

(1) factory production control;

(2) further testing of samples taken at the factory by the manufacturer in accordance with a prescribed test plan;

(b) Tasks for the approved body:

(3) initial type–testing of the product;

(4) initial inspection of factory and of factory production control;

(5) continuous surveillance, assessment and approval of factory production control.

Note: Approved bodies are also referred to as "notified bodies".

3.2 Responsibilities

3.2.1 Tasks of the manufacturer

3.2.1.1 Factory production control

The manufacturer shall exercise permanent internal control of production. All the elements, requirements and provisions adopted by the manufacturer shall be documented in a systematic manner in the form of written policies and procedures, including records of results performed. This production control system shall insure that the product is in conformity with this European technical approval.

The manufacturer may only use initial/ raw/ constituent materials stated in the technical documentation of this European technical approval.

The factory production control shall be in accordance with the control plan of November 2002 which is part of the technical documentation of this European technical approval. The control plan is laid down in the context of the factory production control system operated by the manufacturer and deposited at Deutsches Institut für Bautechnik[9].

The results of factory production control shall be recorded and evaluated in accordance with the provisions of the control plan.

3.2.1.2 Other tasks for the manufacturer

The manufacturer shall, on the basis of a contract, involve a body which is approved for the tasks referred to in section 3.1 in the field of anchors in order to undertake the actions laid down in section 3.2.2. For this purpose, the control plan referred to in sections 3.2.1.1 and 3.2.2 shall be handed over by the manufacturer to the approved body involved.

The manufacturer shall make a declaration of conformity, stating that the construction product is in conformity with the provisions of this European technical approval.

3.2.2 Tasks for the approved bodies

The approved body shall perform the

- initial type-testing of the product ,
- initial inspection of factory and of factory production control,
- continuous surveillance, assessment and approval of factory production control,

9 The control plan is a confidential part of the documentation of the European technical approval, but not published together with the ETA and only handed over to the approved body involved in the procedure of attestation of conformity.
See section 3.2.2.

in accordance with the provisions laid down in the control plan.

The approved body shall retain the essential points of its actions referred to above and state the results obtained and conclusions drawn in a written report.

The approved certification body involved by the manufacturer shall issue an EC certificate of conformity of the product stating the conformity with the provisions of this European technical approval.

In cases where the provisions of the European technical approval and its control plan are no longer fulfilled the certification body shall withdraw the certificate of conformity and inform Deutsches Institut für Bautechnik without delay.

3.3 CE marking

The CE marking shall be affixed on each packaging of the anchor. The letters "CE" shall be followed by the identification number of the approved certification body, where relevant, and be accompanied by the following additional information:

- the name and address of the producer (legal entity responsible for the manufacturer),
- the last two digits of the year in which the CE marking was affixed,
- the number of the EC certificate of conformity for the product,
- the number of the European technical approval,
- the number of the guideline for European technical approval
- use category (ETAG 001-1 Option 1),
- size.

4 Assumptions under which the fitness of the product for the intended use was favourably assessed

4.1 Manufacturing

The European technical approval is issued for the product on the basis of agreed data/information, deposited with Deutsches Institut für Bautechnik, which identifies the product that has been assessed and judged. Changes to the product or production process, which could result in this deposited data/information being incorrect, should be notified to Deutsches Institut für Bautechnik before the changes are introduced. Deutsches Institut für Bautechnik will decide whether or not such changes affect the ETA and consequently the validity of the CE marking on the basis of the ETA and if so whether further assessment or alterations to the ETA shall be necessary.

4.2 Installation

4.2.1 Design of anchorages

The fitness of the anchor for the intended use is given under the following conditions:

The anchorages are designed in accordance with the "Guideline for European technical approval of Metal Anchors for Use in Concrete", Annex C, Method A, for torque controlled expansion anchors under the responsibility of an engineer experienced in anchorages and concrete work.

Verifiable calculation notes and drawings are taking account of the loads to be anchored.

The position of the anchor is indicated on the design drawings (e.g. position of the anchor relative to reinforcement or to supports).

The design of anchorages under fire exposure has to consider the conditions given in the technical Report TR 020 "Evaluation of anchorages in concrete concerning resistance to fire". The relevant characteristic anchor values are given in Annexes 6 and 7. The design method covers anchors with a fire attack from one side only. If the fire attack is from more than one side, the design method may be taken only, if the edge distance of the anchor is $c \geq 300$ mm.

4.2.2 Installation of anchors

The fitness for use of the anchor can only be assumed if the anchor is installed as follows:

- Anchor installation carried out by appropriately qualified personnel and under the supervision of the person responsible for technical matters of the site,
- Use of the anchor only as supplied by the manufacturer without exchanging the components of an anchor,
- Anchor installation in accordance with the manufacturer's specifications and drawings and using the appropriate tools,
- Checks before placing the anchor to ensure that the strength class of the concrete in which the anchor is to be placed is in the range given and is not lower than that of the concrete to which the characteristic loads apply,
- Check of concrete being well compacted, e.g. without significant voids,
- Edge distances and spacings not less than the specified values without minus tolerances,
- Positioning of the drill holes without damaging the reinforcement,
- In case of aborted hole: new drilling at a minimum distance away of twice the depth of the aborted hole or smaller distance if the aborted drill hole is filled with high strength mortar and if under shear or oblique tension load it is not in the direction of load application,
- Cleaning of the hole of drilling dust,
- Anchor installation such that the effective anchorage depth is complied with. This compliance is ensured when the embedment mark of the anchor does no more exceed the concrete surface,
- Application of the torque moment given in Annex 3 using a calibrated torque wrench.

4.2.3 Responsibility of the manufacturer

The manufacturer is responsible to ensure that the information on the specific conditions according to 1 and 2 including Annexes referred to and 4.2.1 and 4.2.2 is given to those who are concerned. This information may be made by reproduction of the respective parts of the European technical approval. In addition all installation data shall be shown clearly on the package and/or on an enclosed instruction sheet, preferably using illustration(s).

The minimum data required are:

- Diameter of drill bit,
- Thread diameter,
- Maximum diameter of clearance hole in the fixture,
- Maximum thickness of the fixture,
- Minimum effective anchorage depth,
- Minimum hole depth,
- Torque moment,
- Information on the installation procedure, including cleaning of the hole, preferably by means of an illustration,
- Reference to any special installation equipment needed,
- Identification of the manufacturing batch.

All data shall be presented in a clear and explicit form.

i. V. Dipl.-Ing. Seyfert
Vice-President of Deutsches Institut für Bautechnik
Berlin, 30 January 2009

beglaubigt:
Lange

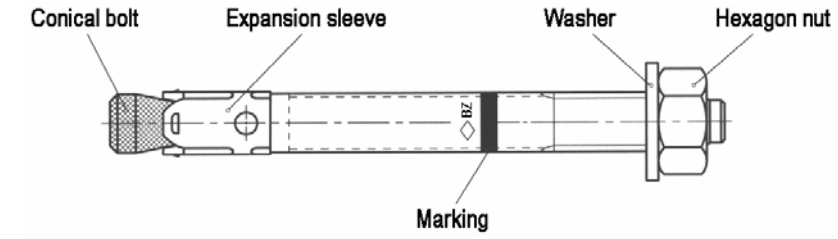

M8 to M16

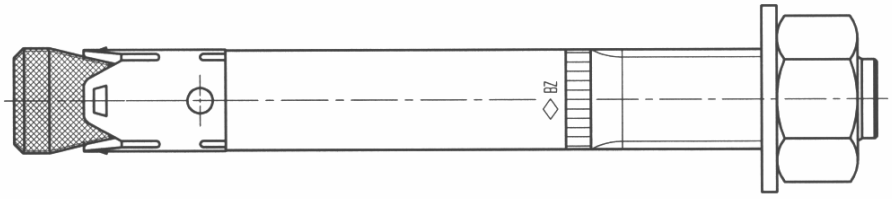

M20

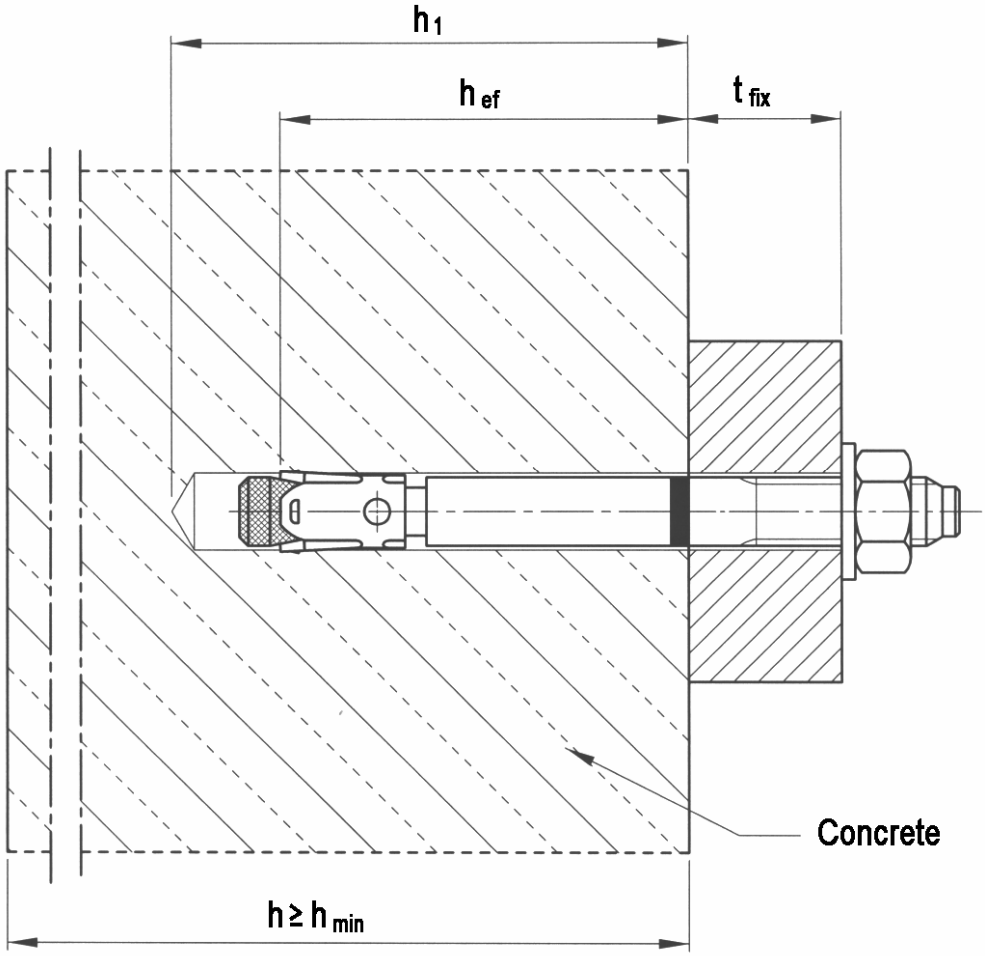

MKT Wedge Anchor BZ plus A4 or HCR	**Annex 1**
Product and intended use	of European technical approval **ETA–99/0010**

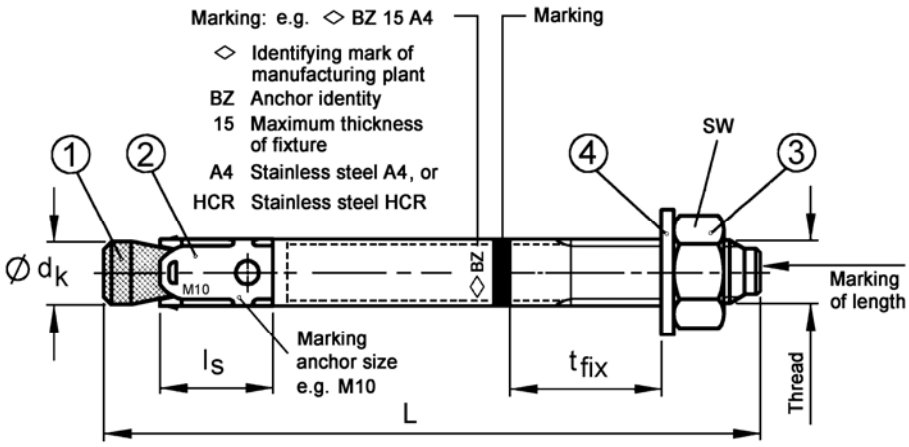

marking of length	C	D	E	F	G	H	I	J	K	L	M
length of anchor min ≥	63.5	76.2	88.9	101.6	114.3	127.0	139.7	152.4	165.1	177.8	190.5
length of anchor max <	76.2	88.9	101.6	114.3	127.0	139.7	152.4	165.1	177.8	190.5	203.2

marking of length	N	O	P	Q	R	S	T	U	V	W	X	Y	Z
length of anchor min ≥	203.2	215.9	228.6	241.3	254.0	279.4	304.8	330.2	355.6	381.0	406.4	431.8	457.2
length of anchor max <	215.9	228.6	241.3	254.0	279.4	304.8	330.2	355.6	381.0	406.4	431.8	457.2	483.0

Table 1: Anchor dimensions

	Anchor size			M8	M10	M12	M16	M20
1	Conical bolt	Thread		M8	M10	M12	M16	M20
		$\varnothing\ d_k$	=	7.9	9.8	11.8	15.7	19.7
		t_{fix} max	≤	3000	3000	3000	3000	3000
		L max		3065	3080	3095	3120	3137
2	Expansion sleeve	l_s	=	14.5	18.5	22	24.3	28
3	Hexagon nut	SW		13	17	19	24	30

Dimension in mm

Table 2: Materials

Part No.	Anchor part	Stainless Steel A4	Stainless Steel HCR
1	Conical bolt	Stainless steel 1.4401, 1.4404, 1.4571, 1.4578 or 1.4362, EN 10088 Cone plastic coated	Stainless steel 1.4529 or 1.4565, EN 10088 Cone plastic coated
2	Expansion sleeve	Stainless steel 1.4401 or 1.4571, EN 10088	Stainless steel 1.4401 or 1.4571, EN 10088
3	Hexagon nut	ISO 3506, strength class 70, stainless steel 1.4401 or 1.4571 EN 10088, coated	ISO 3506, strength class 70, stainless steel 1.4529 or 1.4565, EN 10088, coated
4	Washer acc. to EN ISO 7089, or EN ISO 7093, or EN ISO 7094	Stainless steel 1.4401 or 1.4571, EN 10088	Stainless steel 1.4529 or 1.4565, EN 10088

MKT Wedge Anchor BZ plus A4 or HCR

Anchor dimensions, material

Annex 2

of European technical approval

ETA–99/0010

Table 3: Installation parameters

Anchor Size			M8	M10	M12	M16	M20
Nominal drill hole diameter	d_0	[mm]	8	10	12	16	20
Cutting diameter of drill bit	$d_{cut} \leq$	[mm]	8.45	10.45	12.5	16.5	20.55
Depth of drill hole	$h_1 \geq$	[mm]	60	75	90	110	125
Effective anchorage depth	h_{ef}	[mm]	46	60	65	85	100
Torque moment	T_{inst}	[Nm]	20	35	50	110	200
Diameter of clearance hole in the fixture	$d_f \leq$	[mm]	9	12	14	18	22

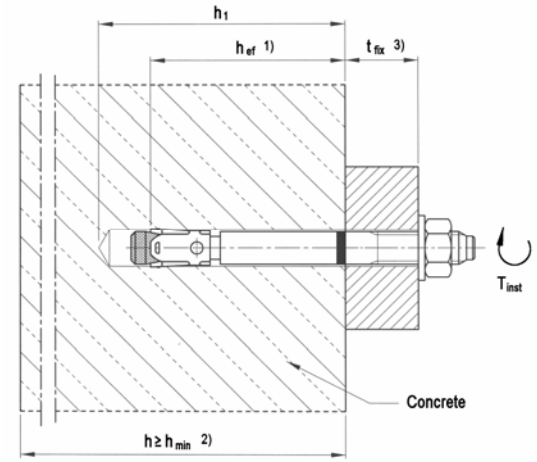

1) Effective anchorage depth h_{ef}
2) Minimum thickness of concrete member h_{min}
3) Thickness of fixture t_{fix}

Table 4: Standard thickness of concrete member and respective minimum spacing and edge distance

Anchor Size			M8	M10	M12	M16	M20
Standard thickness of concrete member	h_{std}	[mm]	100	120	130	160	200
Cracked concrete							
Minimum spacing	s_{min}	[mm]	40	50	60	60	95
	for c ≥	[mm]	70	75	100	100	150
Minimum edge distance	c_{min}	[mm]	40	55	60	60	95
	for s ≥	[mm]	80	90	140	180	200
Non-cracked concrete							
Minimum spacing	s_{min}	[mm]	40	50	60	65	90
	for c ≥	[mm]	80	75	120	120	180
Minimum edge distance	c_{min}	[mm]	50	60	75	80	130
	for s ≥	[mm]	100	120	150	150	240

Intermediate values by linear interpolation

Table 5: Minimum thickness of concrete member and respective minimum spacing and edge distance

Anchor Size			M8	M10	M12	M16	M20
Minimum thickness of concrete member	h_{min}	[mm]	80	100	110	140	200
Cracked concrete							
Minimum spacing	s_{min}	[mm]	40	45	60	70	95
	for c ≥	[mm]	70	90	100	160	150
Minimum edge distance	c_{min}	[mm]	40	50	60	80	95
	for s ≥	[mm]	80	115	140	180	200
Non-cracked concrete							
Minimum spacing	s_{min}	[mm]	40	60	60	80	90
	for c ≥	[mm]	80	140	120	180	180
Minimum edge distance	c_{min}	[mm]	50	90	75	90	130
	for s ≥	[mm]	100	140	150	200	240

Intermediate values by linear interpolation

Table 6: Design method A
Characteristic values for tension loads

Anchor Size			M8	M10	M12	M16	M20
Steel failure							
Characteristic resistance	$N_{Rk,s}$	[kN]	16	27	40	64	108
Partial safety factor	γ_{MS} 3)		1.50				1.68
Pull-out in cracked concrete C20/25							
Characteristic resistance	$N_{Rk,p}$	[kN]	5	9	12	25	- 1)
Pull-out and splitting in non-cracked concrete C20/25 for standard thickness of member The higher one of the decisive values of Case 1 and Case 2 is applicable.							
Standard thickness of concrete member	$h_{std} \geq$	[mm]	100	120	130	160	200
Case 1							
Characteristic resistance	$N_{Rk,p}=N^0_{Rk,sp}$ 4)	[kN]	9	12	16	30	40
Respective spacing	$s_{cr,sp}$	[mm]	3 h_{ef}				
Respective edge distance	$c_{cr,sp}$	[mm]	1.5 h_{ef}				
Case 2							
Characteristic resistance	$N_{Rk,p}=N^0_{Rk,sp}$ 4)	[kN]	12	16	20	35	- 1)
Respective spacing	$s_{cr,sp}$ 5)	[mm]	230	250	260	400	440
Respective edge distance	$c_{cr,sp}$ 5)	[mm]	115	125	130	200	220
Pull-out and splitting in non-cracked concrete C20/25 for minimum thickness of member							
Minimum thickness of concrete member	$h_{min} \geq$	[mm]	80	100	110	140	200
Characteristic resistance	$N_{Rk,p}=N^0_{Rk,sp}$ 4)	[kN]	12	16	20	35	- 1)
Respective spacing	$s_{cr,sp}$ 5)	[mm]	5 h_{ef}				4.4 h_{ef}
Respective edge distance	$c_{cr,sp}$ 5)	[mm]	2.5 h_{ef}				2.2 h_{ef}
Increasing factors for $N_{Rk,p}$ and $N^0_{Rk,sp}$	ψ_C C30/37	[-]	1.22				
	ψ_C C40/50	[-]	1.41				
	ψ_C C50/60	[-]	1.55				
Concrete cone failure							
Effective anchorage depth	h_{ef}	[mm]	46	60	65	85	100
Spacing	$s_{cr,N}$	[mm]	3 h_{ef}				
Edge distance	$c_{cr,N}$	[mm]	1.5 h_{ef}				
Partial safety factor	$\gamma_{Mp}= \gamma_{Msp} =\gamma_{Mc}$ 3)	[-]	1.5 2)				

1) Pull-out is not decisive.
2) The partial safety factor γ_2 = 1.0 is included
3) In absence of other national regulations
4) For the proof against splitting failure according to ETAG 001 Annex C, $N^0_{Rk,c}$ in equation (5.3) has to be replaced by $N^0_{Rk,sp}$ with consideration of the member thickness ($\psi_{ucr,sp}$ = 1.0).
5) The values $s_{cr,sp}$ und $c_{cr,sp}$ may be linearly interpolated between the member thicknesses h_{std} und h_{min}.

Table 7: Displacements under tension loads

Anchor Size			M8	M10	M12	M16	M20
Tension load in cracked concrete	N	[kN]	2.4	4.3	5.7	11.9	17.1
Displacement	δ_{N0}	[mm]	0.7	1.8	0.8	0.7	0.9
	$\delta_{N\infty}$	[mm]	1.2	1.4	1.4	1.4	1.0
Tension load in non-cracked concrete	N	[kN]	5.8	7.6	9.5	16.7	23.8
Displacement	δ_{N0}	[mm]	0.6	0.5	0.5	0.2	0.4
	$\delta_{N\infty}$	[mm]	1.2	1.0	1.0	0.4	0.8

Table 8: Design method A
Characteristic values for shear loads

Anchor Size			M8	M10	M12	M16	M20
Steel failure without lever arm							
Characteristic resistance	$V_{Rk,s}$	[kN]	13	20	30	55	86
Partial safety factor	γ_{Ms} [1)]	[-]	1.25				1.4
Steel failure with lever arm							
Characteristic bending resistance	$M^0_{Rk,s}$	[Nm]	26	52	92	233	454
Partial safety factor	γ_{Ms} [1)]	[-]	1.25				1.4
Concrete pryout failure							
Factor in equation (5.6) ETAG 001, Annex C, 5.2.3.3	k	[-]	2.0	2.0	2.0	2.0	2.0
Partial safety factor	γ_{Mcp} [1)]	[-]	1.5 [2)]				
Concrete edge failure							
Effective length of anchor in shear loading	l_f	[mm]	46	60	65	85	100
Outside diameter of anchor	d_{nom}	[mm]	8	10	12	16	20
Partial safety factor	γ_{Mc} [1)]	[-]	1.5 [2)]				

[1)] In absence of other national regulations
[2)] The partial safety factor γ_2 = 1.0 is included

Table 9: Displacements under shear loads

Anchor Size			M8	M10	M12	M16	M20
Shear load in cracked and non-cracked concrete	V	[kN]	7.3	11.6	16.9	31.3	43.8
Displacements	δ_{V0}	[mm]	3.2	4.4	5.2	6.5	2.9
	$\delta_{V\infty}$	[mm]	4.8	6.6	7.8	9.8	4.3

Table 10: Characteristic values to tension loads under fire exposure in cracked and non-cracked concrete C20/25 to C50/60

Anchor size		M8				M10				M12				M16				M20			
Fire resistance duration	R... [min]	30	60	90	120	30	60	90	120	30	60	90	120	30	60	90	120	30	60	90	120
Steel failure:																					
Characteristic resistance	$N_{Rk,s,fi}$ [kN]	3.8	2.9	2.0	1.6	6.9	5.2	3.5	2.7	11.5	8.6	5.6	4.2	21.5	16.0	10.5	7.8	33.5	25.0	16.4	12.1
Pullout failure:																					
Characteristic resistance in concrete C20/25 to C50/60	$N_{Rk,p,fi}$ [kN]	1.3			1.0	2.3			1.8	3.0			2.4	6.3			5.0	9.0			7.2
Concrete cone failure:																					
Characteristic resistance in concrete C20/25 to C50/60	$N^0_{Rk,c,fi}$ [kN]	2.6			2.1	5.0			4.0	6.1			4.9	12.0			9.6	18.0			14.4
Spacing	$s_{cr,N,fi}$	4 x h_{ef}																			
Edge Distance	$c_{cr,N,fi}$	2 x h_{ef}																			
Minimum spacing and edge distance under fire exposure from one side		according to Annex 3																			
Minimum spacing and edge distance under fire exposure from more than one side		s_{min} according to Annex 3; $c_{min} \geq 300$ mm.																			

In absence of other national regulations the partial safety factor for resistance under fire exposure $\gamma_{M,fi} = 1.0$ is recommended.

Table 11: Characterstic values to shear loads under fire exposure in cracked and non-cracked concrete C20/25 to C50/60

Anchor size:		**M8**				**M10**				**M12**				**M16**				**M20**			
Fire resistance duration	R... [min]	30	60	90	120	30	60	90	120	30	60	90	120	30	60	90	120	30	60	90	120
Steel failure without lever arm:																					
Characteristic resistance	$V_{Rk,s,fi}$ [kN]	3.8	2.9	2.0	1.6	6.9	5.2	3.5	2.7	11.5	8.6	5.6	4.2	21.5	16.0	10.5	7.8	33.5	25.0	16.4	12.1
Steel failure with lever arm:																					
Characteristic resistance	$M^0_{Rk,s,fi}$ [Nm]	3.8	2.9	2.1	1.6	9.0	6.8	4.5	3.4	17.9	13.3	8.8	6.5	45.5	33.9	22.2	16.4	88.8	66.1	43.4	32.1

Concrete pryout failure:

In Equation (5.6) of ETAG 001, Annex C, 5.2.3.3 the k-factor 2.0 and the relevant values of $N^0_{Rk,c,fi}$ of Table 10 have to be considered.

Concrete edge failure:

The initial value $V^0_{Rk,c,fi}$ of the characteristic resistance in concrete C20/25 to C50/60 under fire exposure may be determined by:

$V^0_{Rk,c,fi} = 0{,}25 \times V^0_{Rk,c}$ (R30, R 60, R90) $\qquad$ $V^0_{Rk,c,fi} = 0{,}20 \times V^0_{Rk,c}$ (R120)

with $V^0_{Rk,c}$ initial value of the characteristic resistance in cracked concrete C20/25 under normal temperature.

In absence of other national regulations the partial safety factor for resistance under fire exposure $\gamma_{M,fi} = 1.0$ is recommended.